HMWN48FS
WALL HOOD (48-INCH WIDTH)
MASTERPIECE® SERIES

FEATURES & BENEFITS

- Three fan speeds
- Built-in 'Clean Filter' reminder light illuminates after 40 hours of operation
- Delayed shut-off tackles lingering odors for up to 10 minutes
- Dishwasher-safe hybrid mesh filters

ACCESSORIES (OPTIONAL)

Roofplates

RFPLT600P - For use with 600 CFM Remote Blower VTR630P

RFPLT1000P - For use with 1000 CFM Remote Blower VTR1030P and 1300 CFM Blower VTR1330P

48" W, 6" H Stainless Steel Duct Cover	DC48US
48" W, 12" H Stainless Steel Duct Cover	DCT48US

GENERAL PROPERTIES	
Operating Mode	Ducted
Maximum CFM	N/A
Number of Speed Settings	3-Stage
Motor Location	Blower (Sold Separately)
Number Of Lights	Lights Sold Separately - 3
Bulb Type	50 W - GU10 Base
Total Power Of The Lamps (W)	100 W
Damper Included	Yes
Grease Filter Material	Washable Synthetic
Grease Filter Type	Multilayer Cassette
TECHNICAL DETAILS	
Watts (W)	150 W
Current (A)	15 A
Volts (V)	120 V
Frequency (Hz)	60 HZ
Plug Type	Fixed Connection
DIMENSIONS & WEIGHT	
Overall Appliance Dimensions (Width Of Canopy Included) (HxWxD) (in)	11" x 48" x 23 1/8"
Required Distance Above Cooktop / Range Cooking Surface	30" / 30"
Diameter of Air Duct (in) Top	10"
Diameter of Air Duct (in) Back	N/A
Net Weight (lbs)	30 lbs

ACCESSORIES (REQUIRED)

Blower (Sold Separately)

BLOWER OPTIONS	
Remote Blower (Mounted to Roof or External Wall)	VTR630P - 600 CFM
	VTR1030P - 1000 CFM
	VTR1330P - 1300 CFM
Inline Blower (Mounted Between Kitchen and External Wall)	VTI610P - 600 CFM
	VTI1010P - 1000 CFM
Integrated Blower (Mounted in Hood)	VTN600F - 600 CFM
	VTN1000F - 1000 CFM

WARRANTY	
Limited Warranty Parts And Labor	2 Year

HMWN48FS
WALL HOOD (48-INCH WIDTH)
MASTERPIECE® SERIES

HOOD DIMENSIONS

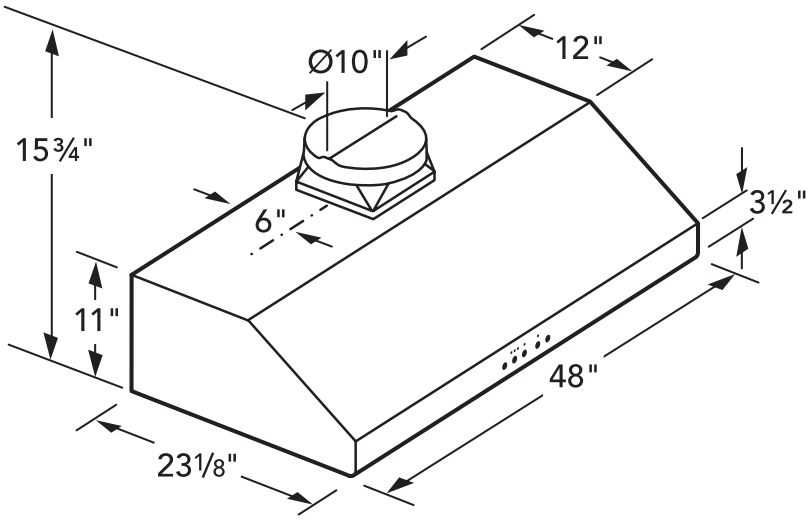

OPTIONAL ACCESSORIES

48" WIDE DUCT COVER
DC48US 6" HIGH
DCT48US 12" HIGH

Stainless steel duct cover for wall hood applications

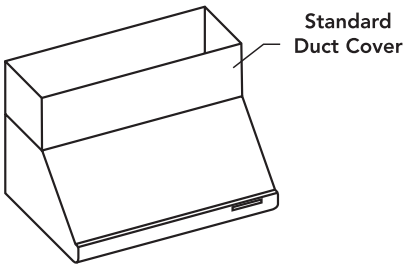

REMOTE BLOWER ACCESSORIES

ROOFPLATE–RFPLT600P

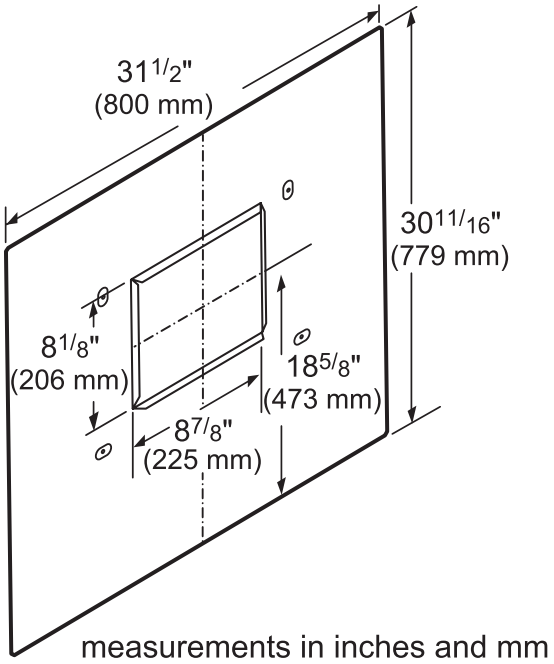

measurements in inches and mm

ROOFPLATE–RFPLT1000P

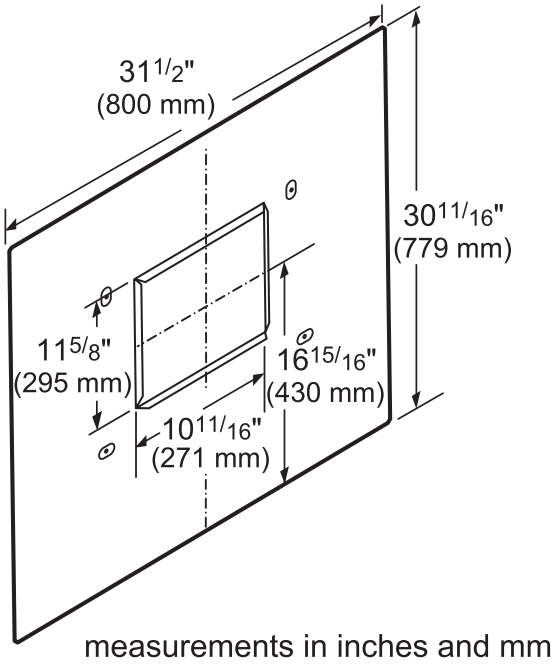

measurements in inches and mm

HMWN48FS
WALL HOOD (48-INCH WIDTH)
MASTERPIECE® SERIES

REMOTE BLOWERS (MOUNTED TO ROOF OR EXTERNAL WALL)

VTR630P–600 CFM

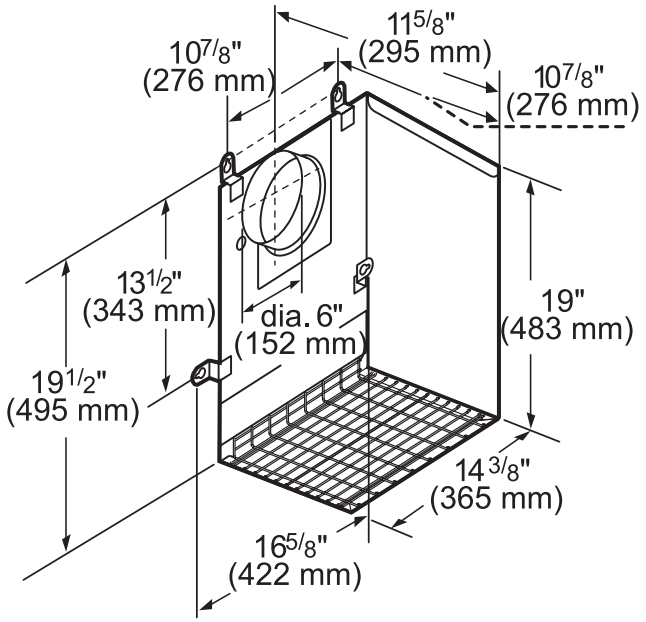

measurements in inches and mm

VTR1030P–1000 CFM

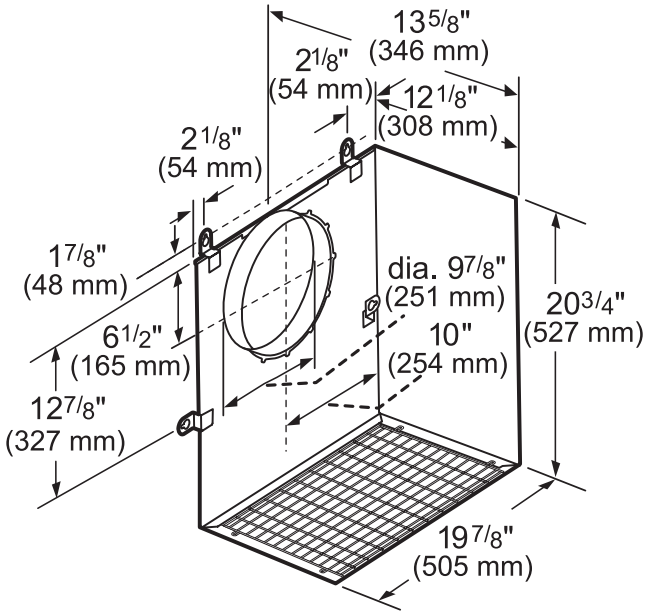

measurements in inches and mm

VTR1330P–1300 CFM

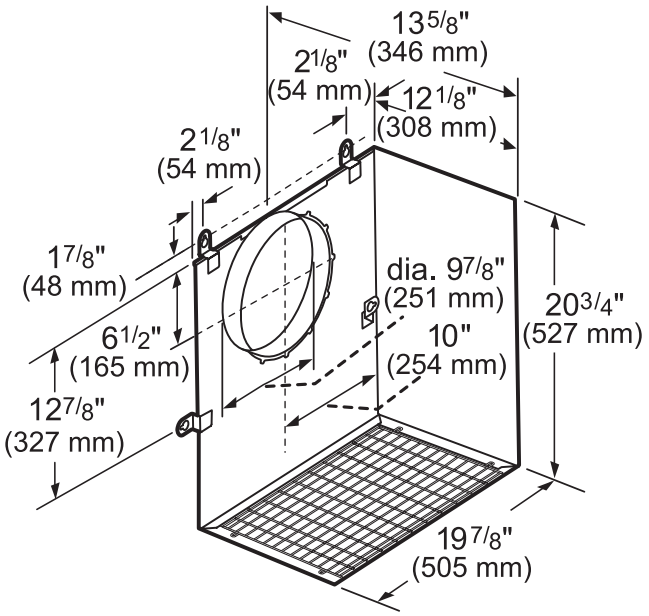

measurements in inches and mm

HMWN48FS
WALL HOOD (48-INCH WIDTH)
MASTERPIECE® SERIES

INLINE BLOWERS (MOUNTED BETWEEN KITCHEN AND EXTERNAL WALL)

VTI610P–600 CFM

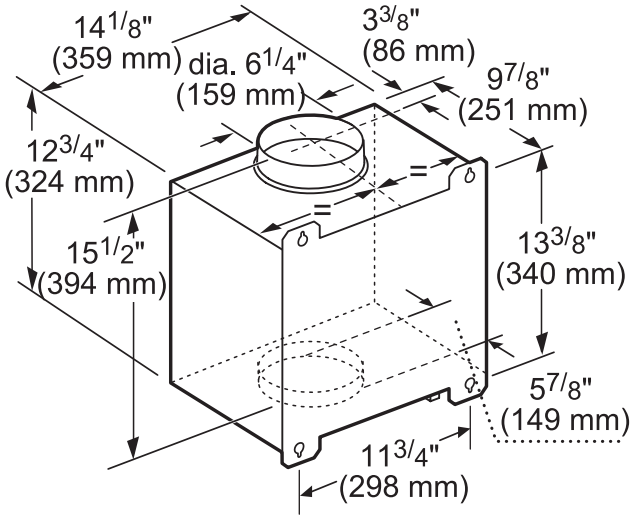

measurements in inches and mm

VTI1010P–1000 CFM

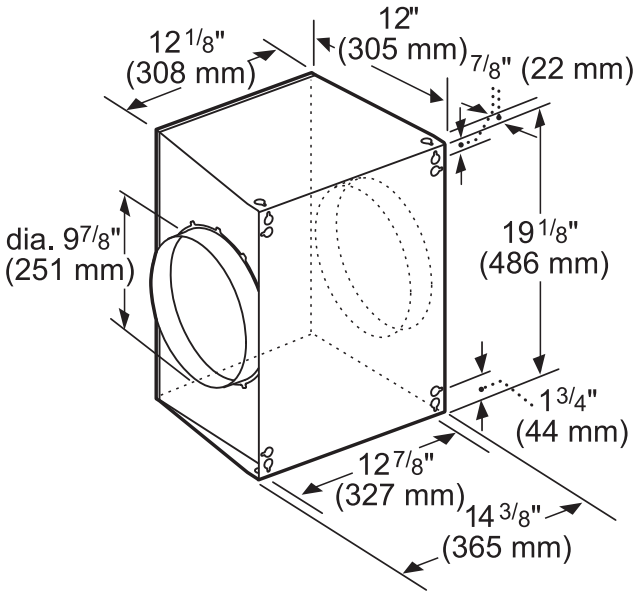

measurements in inches and mm

INTEGRATED BLOWERS (MOUNTED IN HOOD)

VTN600F–600 CFM

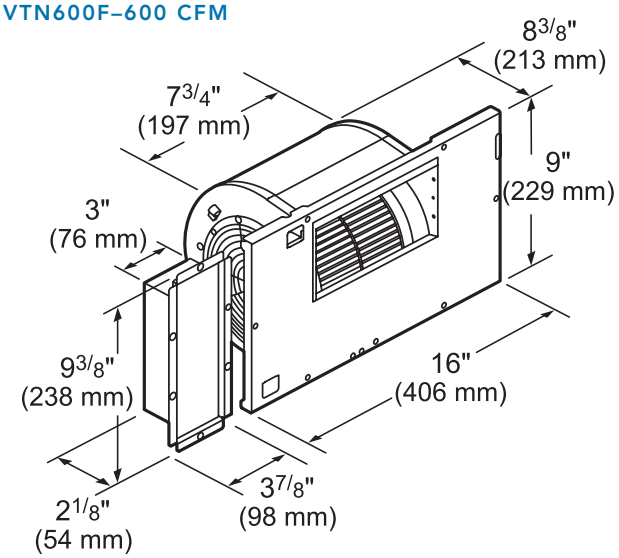

measurements in inches and mm

VTN1000F–1000 CFM

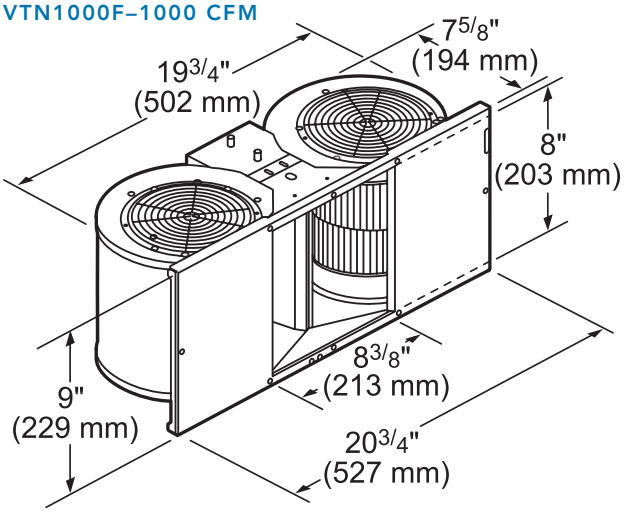

measurements in inches and mm

These warranties give you specific legal rights and you may have other rights that vary from state to state. Full warranty and limited warranty from date of installation. For complete warranty details, refer to your Use & Care manual, or ask your dealer.

Specifications are for planning purposes only. Refer to installation instructions and consult your countertop supplier prior to making counter opening. Consult with a heating and ventilation engineer for your specific ventilation requirements. For the most detailed information, refer to installation instructions accompanying product or write to Thermador indicating the model number. Specifications are correct at time of printing. Thermador reserves the right to change product specifications or design without notice. Some models are certified for use in Canada. Thermador is not responsible for products that are transported from the U.S. for use in Canada.

1 800 735 4328 | USA THERMADOR.COM | CANADA THERMADOR.CA | ©2017 BSH HOME APPLIANCES CORPORATION. ALL RIGHTS RESERVED.