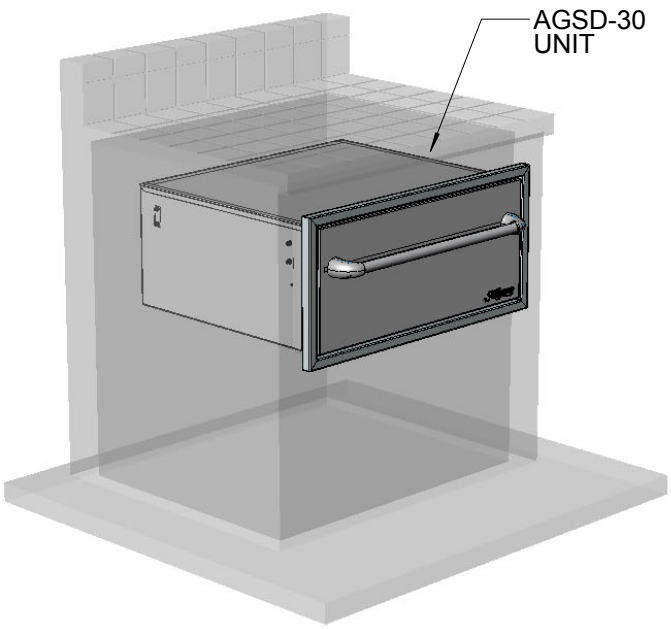

AGSD-30 TYPICAL INSTALLATION

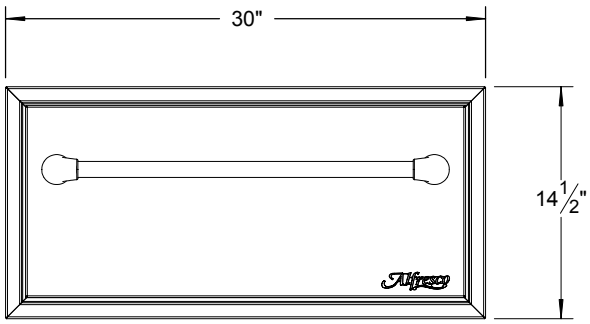

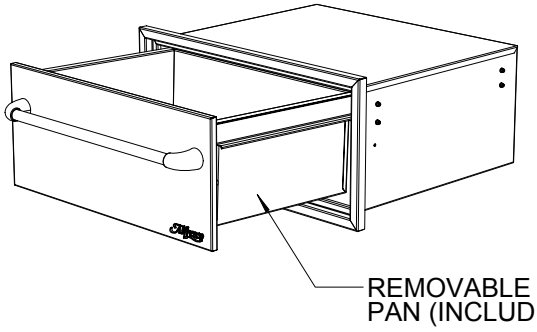

COUNTER FRONT CUTOUT REQUIREMENTS

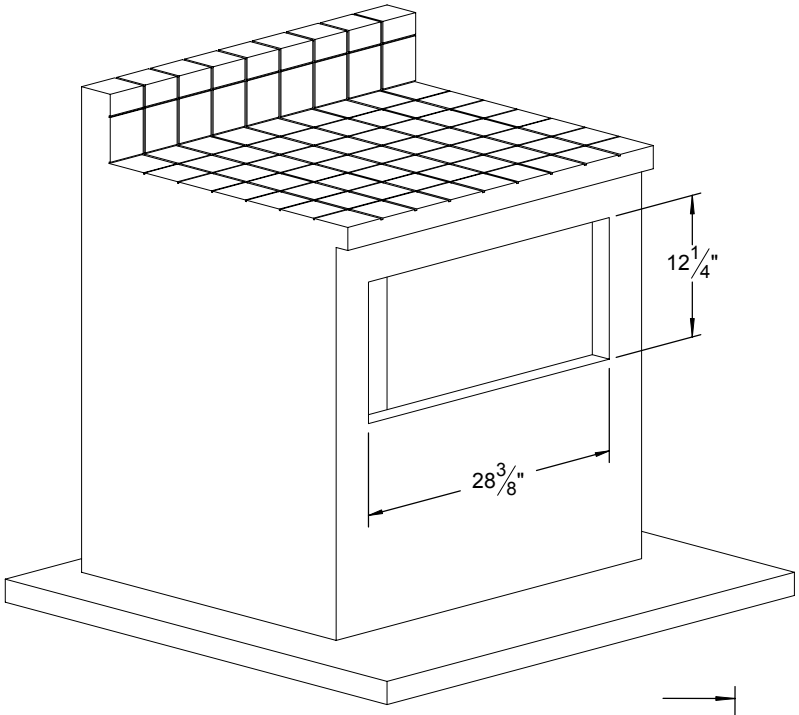

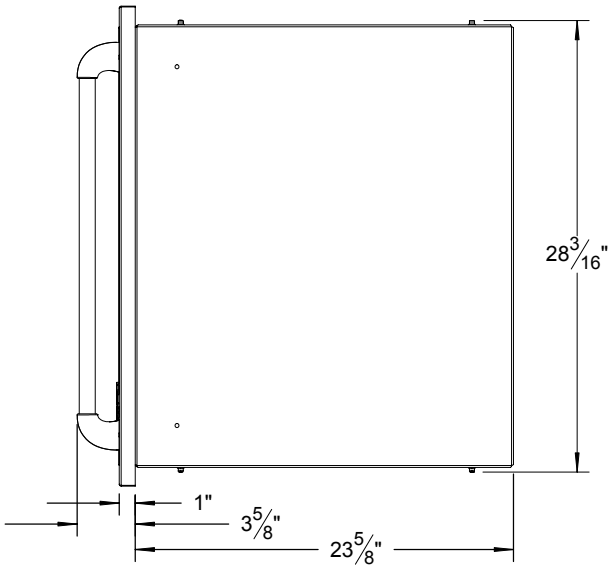

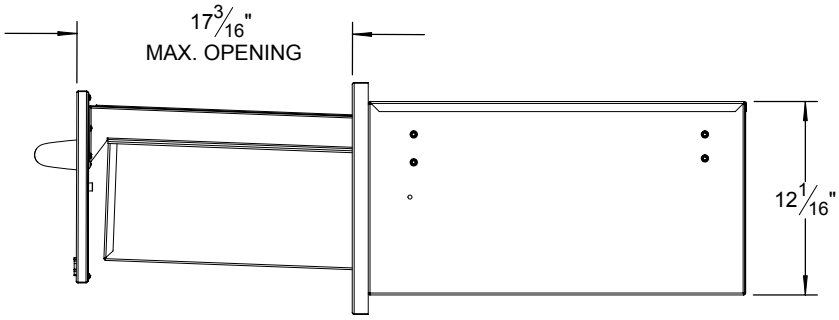

Alfresco™
SUPERIOR EQUIPMENT SOLUTIONS
7039 EAST SLAUSON AVENUE
COMMERCE, CA. 90040

THE INFORMATION CONTAINED IN THIS DRAWING IS THE SOLE PROPERTY OF SUPERIOR EQUIPMENT SOLUTIONS INC. ANY REPRODUCTION IN PART OR AS A WHOLE WITHOUT WRITTEN PERMISSION FROM SUPERIOR EQUIPMENT SOLUTIONS, INC. IS PROHIBITED.

DRAWN BY: ADRIAN CRISCI
CREATED: October 02, 2007 2:05:47 PM

PROJECT TITLE: **AGSD-30**

DRAWING TITLE:

AGSD-30 - STORAGE DRAWER SPECIFICATIONS

DRAWING NO.:
AGSD-30 SPEC SHEET

SHEET 1 OF 1