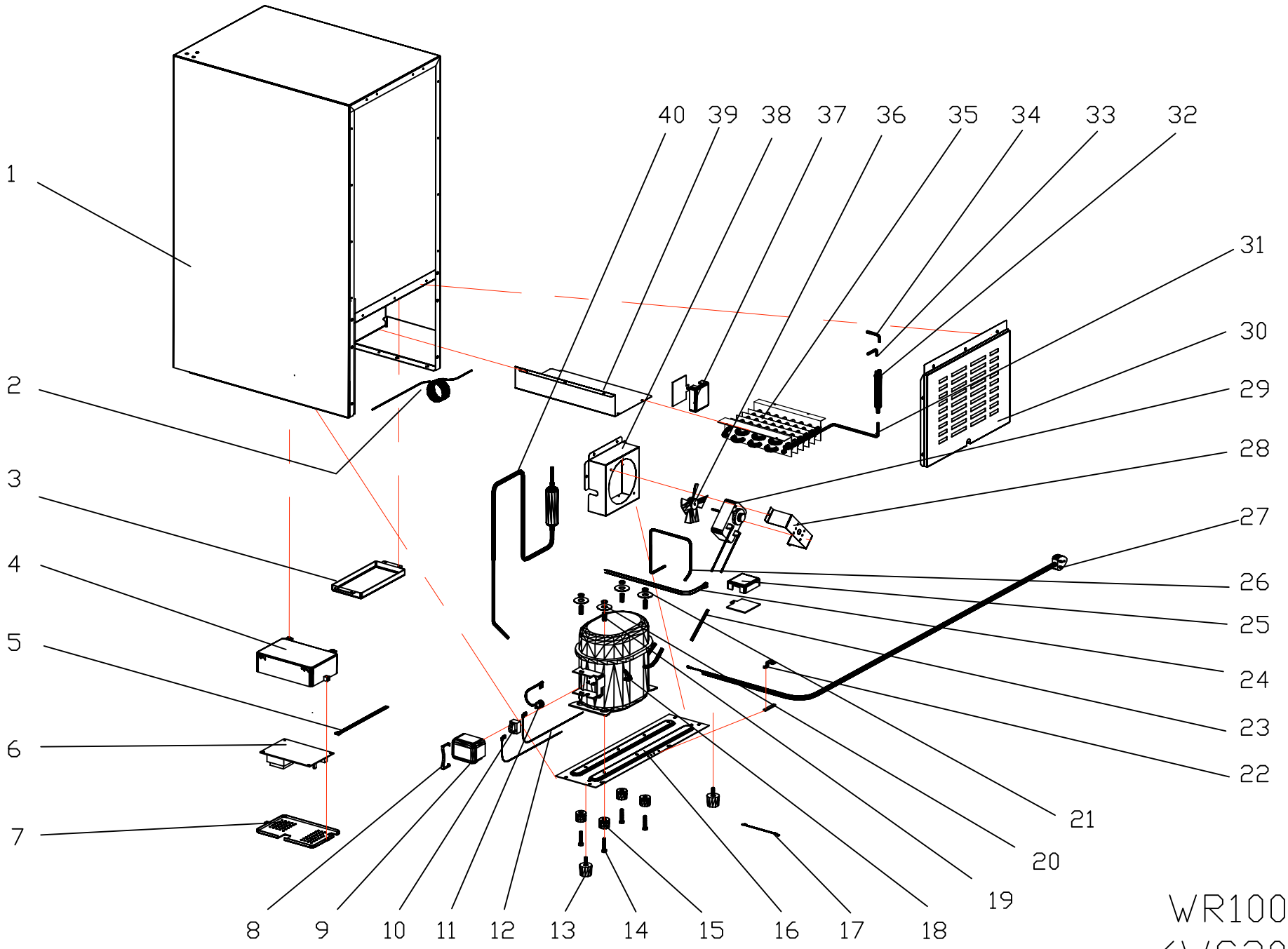

WR100ISS
(WC30SSR)

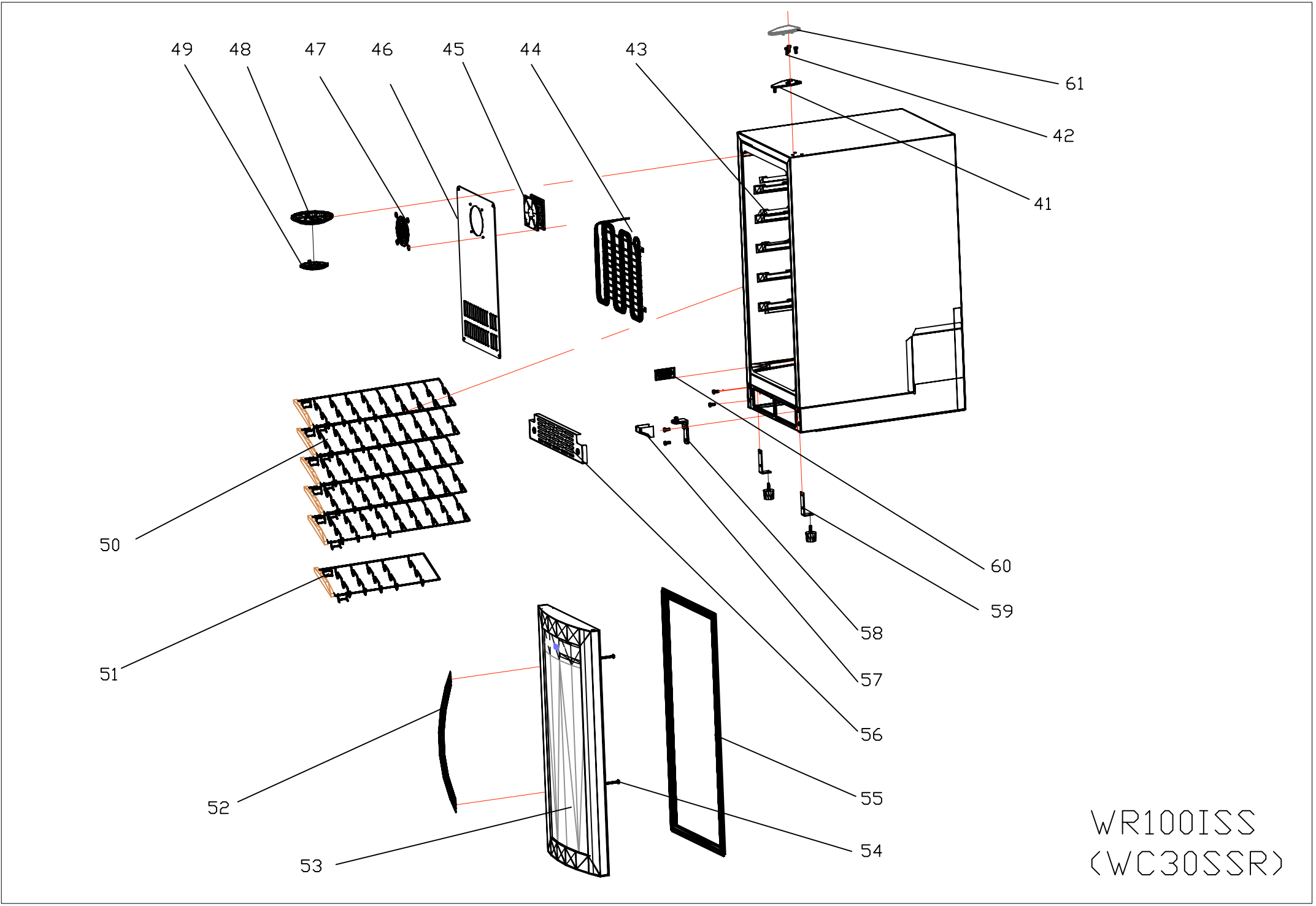
49
48
47
46
45
44
43
61
42
41
50
51
52
53
60
59
58
57
56
55
54
WR100ISS
(WC30SSR)

WC30SSR PART LIST

No	Part name	Qty
1	Cabinet	1
2	Capillary	1
3	Connect water dish	1
4	box of electronic plate	1
5	Power importation/signal output Electric wire	1
6	electronic plate	1
7	box cover of electronic plate	1
8	Connect line cover supporter	1
9	Connect line cover	1
10	PTC starter	1
11	overload protector	1
12	Compressor conjunction electric wire	4
13	Leveling leg	4
14	M6 Stud bolt	4
15	Compressor leg	4
16	Compressor base	1
17	earth wire	1
18	Compressor	1
19	Compressor leg supporter	4
20	Washer	4
21	M6 nut	4
22	wire fixation	1
23	low presure vacuum tube	1
24	Motor fan conjunction electric wire	1
25	Connect line box of Motor fan	1
26	suction pipe	1
27	Power supply plug wire	1
28	motor fan fixation	1
29	motor fan	1
30	Backboard	1
31	condenser liquid tube	1
32	Dry filter	1
33	high pressure vacuum tube	1
34	shunt resistor	1
35	condenser	1
36	fan	1
37	main connect line box	1

WC30SSR PART LIST

No	Part name	Qty
38	motor fan supporter	1
39	Cover of condenser	1
40	Accumulator	1
41	Top hinge	1
42	M6 nut	3
43	liner	1
44	evaporatior	1
45	DC fan	1
46	inner plank	1
47	Cover of DC fan	1
48	Base of light	1
49	Cover of light	1
50	Big wooden trim of wire Shelf	5
51	Small wooden trim of wire Shelf	1
52	Handle	1
53	door	1
54	Handle support bolt	2
55	door gasket	1
56	Bottom grille	1
57	lower hinge cover	1
58	lower hinge	1
59	lower hinge supporter	2
60	sensor-temperature detector	1
61	upper hinge cover	1