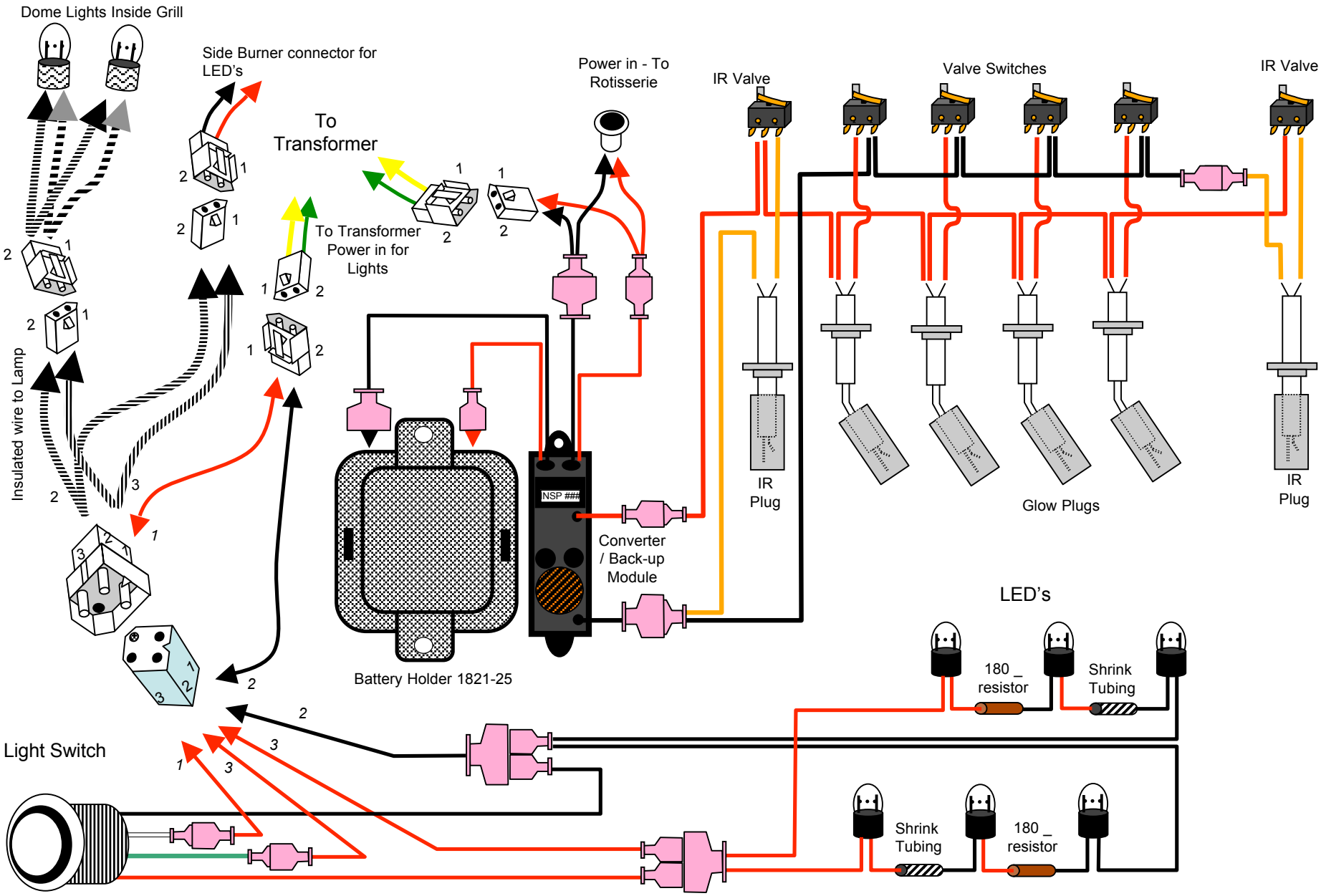For L54 Grills